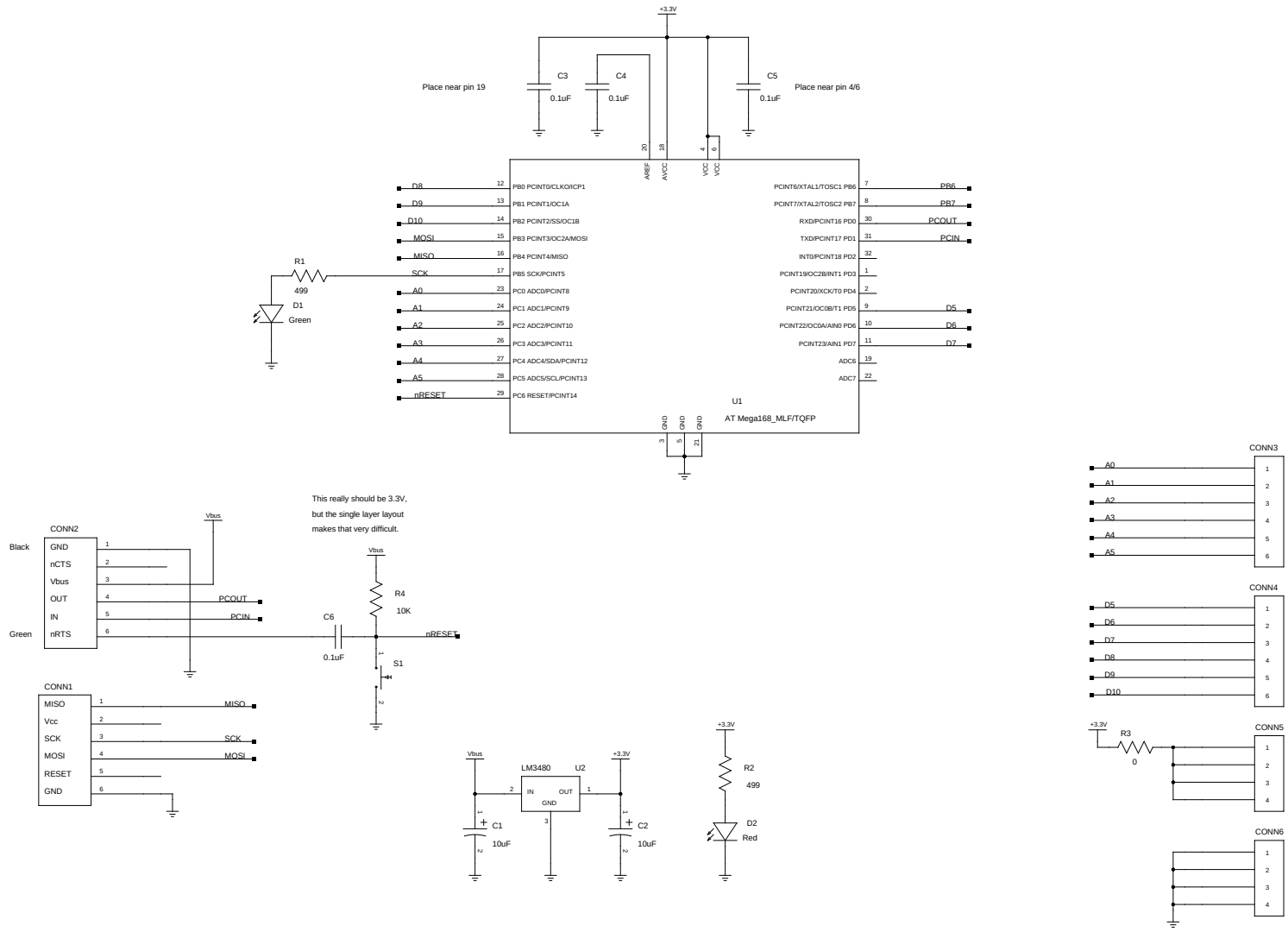

TITLE	FABio 1.0		
FILE:		REVISION:	2/28/2010
PAGE	OF	DRAWN BY:	David Carr